PS-25KL / PS-30KL

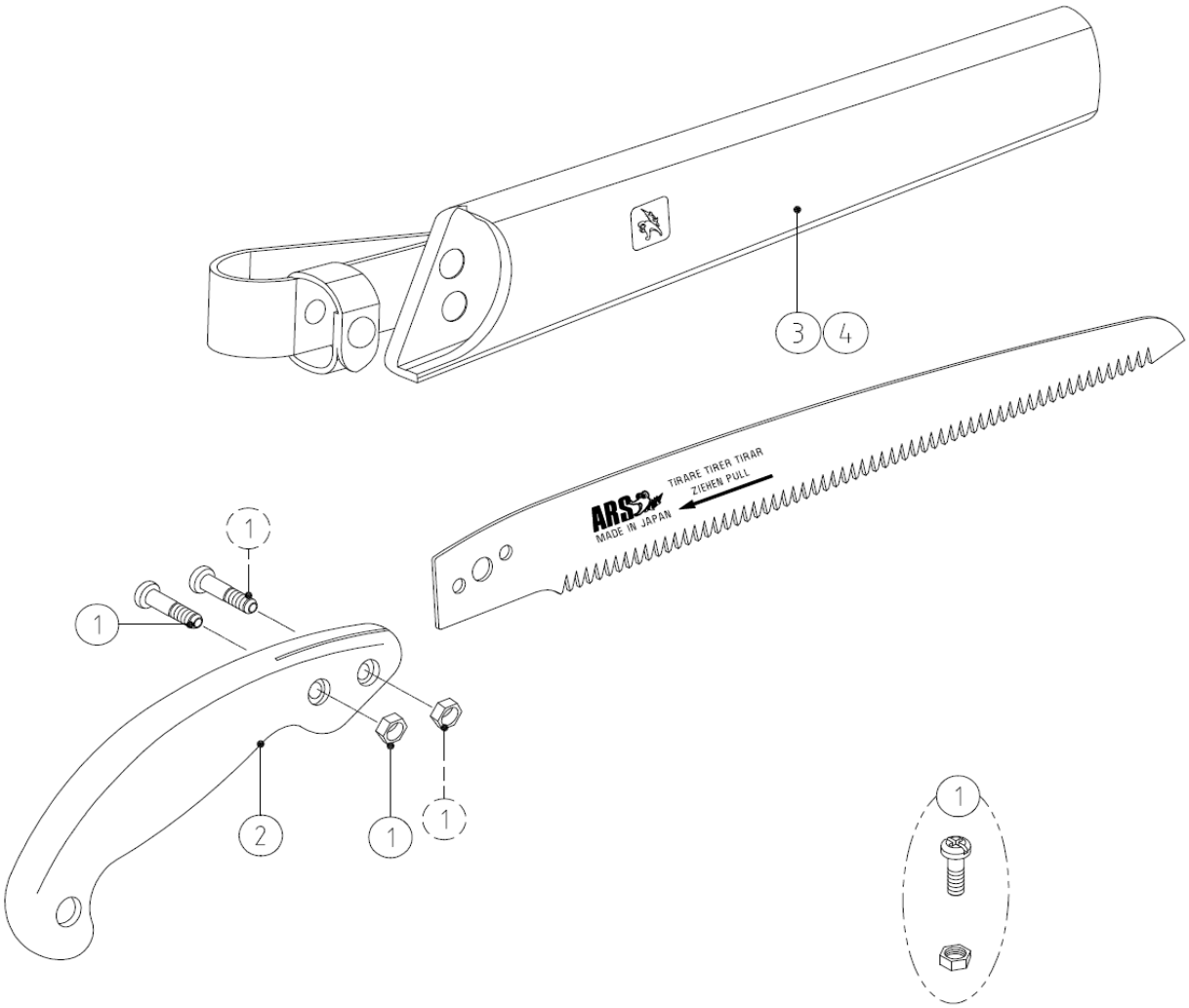

PARTS NO.	SPECIFICATION	PARTS NO.	SPECIFICATION
① SP-6	BOLT & NUT FOR PS-25KL/30KL (1PC EACH)		
② SP-160	WOODEN GRIP FOR PS-25KL/30KL		
③ SH-25 EX	WOODEN SHEATH FOR PS-25KL		
④ SH-30 EX	WOODEN SHEATH FOR PS-30KL		